DATUM A DESIGN

CAD & DESIGN SAMPLE PORTFOLIO

Precision in Every Dimension

Mechanical design & drafting — production drawings with GD&T, 3D modeling and assemblies

Utility substation design — one-line diagrams, protection & control schematics, wiring diagrams

Sample work recreated for demonstration — no client or employer content

500+ PRODUCTION DRAWINGS AND 500+ ASSEMBLIES RELEASED

500+
PRODUCTION DRAWINGS

500+
ASSEMBLIES PRODUCED

INSIDE THIS PORTFOLIO

01 Hydraulic manifold block
Drawing projected from a real parametric 3D model — SAE O-ring ports, galleries, GD&T (DAD-SMP-004)

02 Production drawing with GD&T
Machined mounting bracket — front, top and section views, datum scheme, feature control frames (DAD-SMP-001)

03 Assembly drawing
Bench vise — drawn from a 3D assembly model, exploded view, balloons and bill of materials (DAD-SMP-002)

04 Model evidence
Feature lists and section views of the parametric CAD models behind samples 004 and 002 (DAD-SMP-005)

05 Electrical schematic
Motor control panel — 480V power circuit, 120V control ladder with seal-in start, panel layout (DAD-SMP-003)

06 SUBSTATION ONE-LINE DIAGRAM — DAD-SMP-006
Elm Ridge substation, 69 kV to 12.47 kV — two transformers, four feeders, sectionalized bus

07 SUBSTATION PROTECTION & CONTROL SCHEMATICS — DAD-SMP-007
Elm Ridge substation — CT and VT secondary circuits, relay panel

08 SUBSTATION CONTROL PANEL WIRING DIAGRAM — DAD-SMP-008
Elm Ridge substation — 12.47 kV main breaker 52-M1, control panel P1

09 SUBSTATION GENERAL ARRANGEMENT — DAD-SMP-009
Elm Ridge substation — yard layout, equipment arrangement, trenches

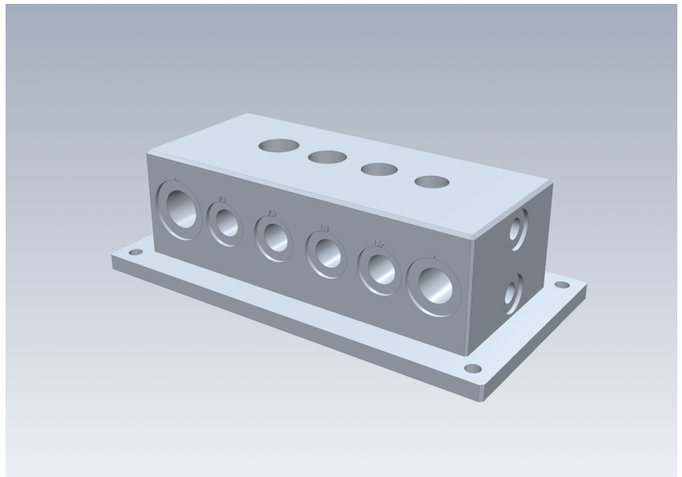

Hydraulic manifold block — recreated sample work

Client Creo and CATIA work is under NDA and cannot be shared. These samples were recreated and modeled parametrically for this portfolio; the same modeling and drawing work is delivered in Creo Parametric or CATIA V5 on client projects.

CORE SKILLS

- Creo Parametric (incl. Piping)
- ASME GD&T (Y14.5)
- CATIA V5
- Production drawings
- SolidWorks
- Sheet metal & weldments
- ANSYS FEA
- Electrical schematics

hello@datumadesign.com · datumadesign.com

All drawings in this portfolio are original recreated sample work. No client or employer confidential content.

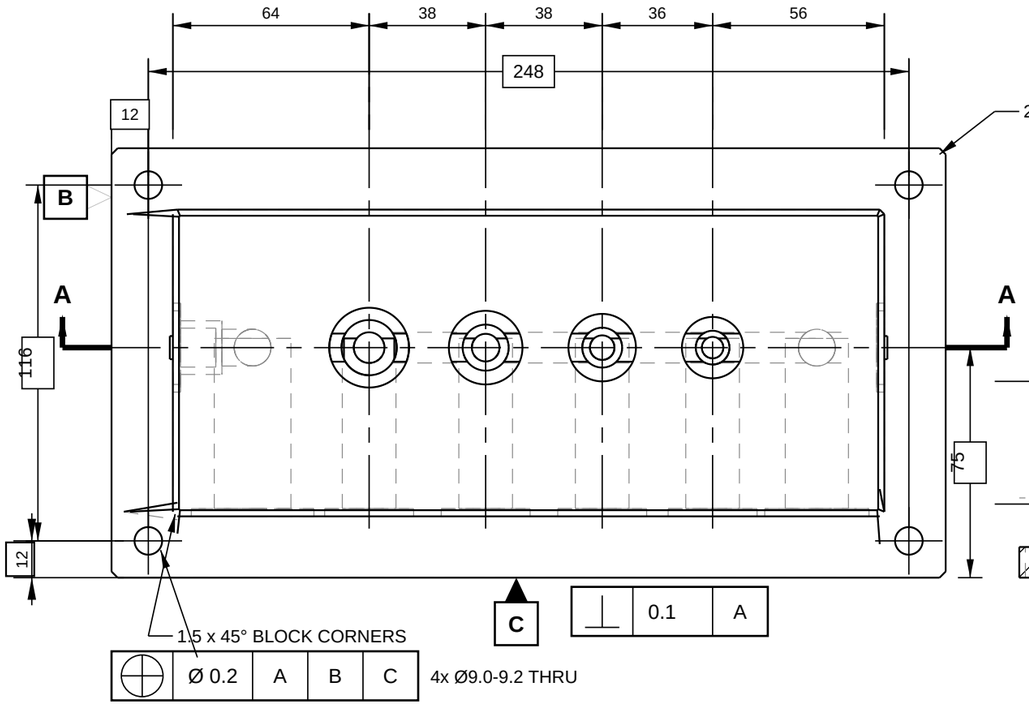

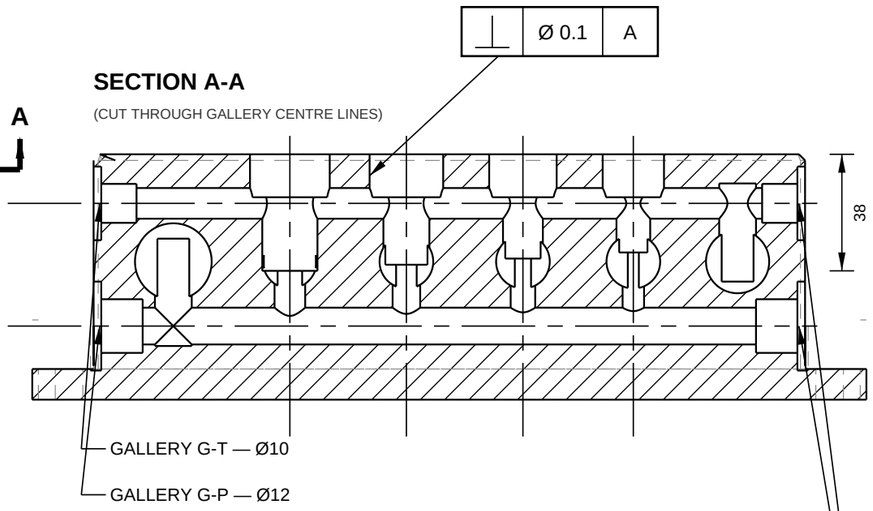

NOTES:

1. DIMENSIONS IN MILLIMETRES. INTERPRET PER ASME Y14.5-2018.
2. MATERIAL: STEEL 1045, AS-ROLLED, BLACK OXIDE FINISH.
3. DEBURR ALL INTERSECTING BORES AND INTERNAL PASSAGES.
4. BREAK ALL OTHER EXTERNAL EDGES 0.3-0.5.
5. DESIGN PRESSURE 210 BAR; PROOF TEST 315 BAR.
6. CLEAN TO ISO 4406 18/16/13 BEFORE ASSEMBLY.
7. WORK PORTS: SAE J1926 O-RING BOSS.
8. THREAD FORM NOT MODELLED.
9. PORT IDS ENGRAVED ON FRONT FACE.
10. VIEWS PROJECTED FROM THE SOLID MODEL.
11. GALLERY PLUGS: SAE-6 ORB (9/16-18 UNF) BOTH GALLERIES, BOTH ENDS.
12. CAVITY FORMS SIMPLIFIED FOR THIS SAMPLE. SEALING BETWEEN ZONES IS BY THE CARTRIDGE VALVE'S OWN SEALS PER THE VALVE MANUFACTURER'S CAVITY SPECIFICATION.

TOP VIEW

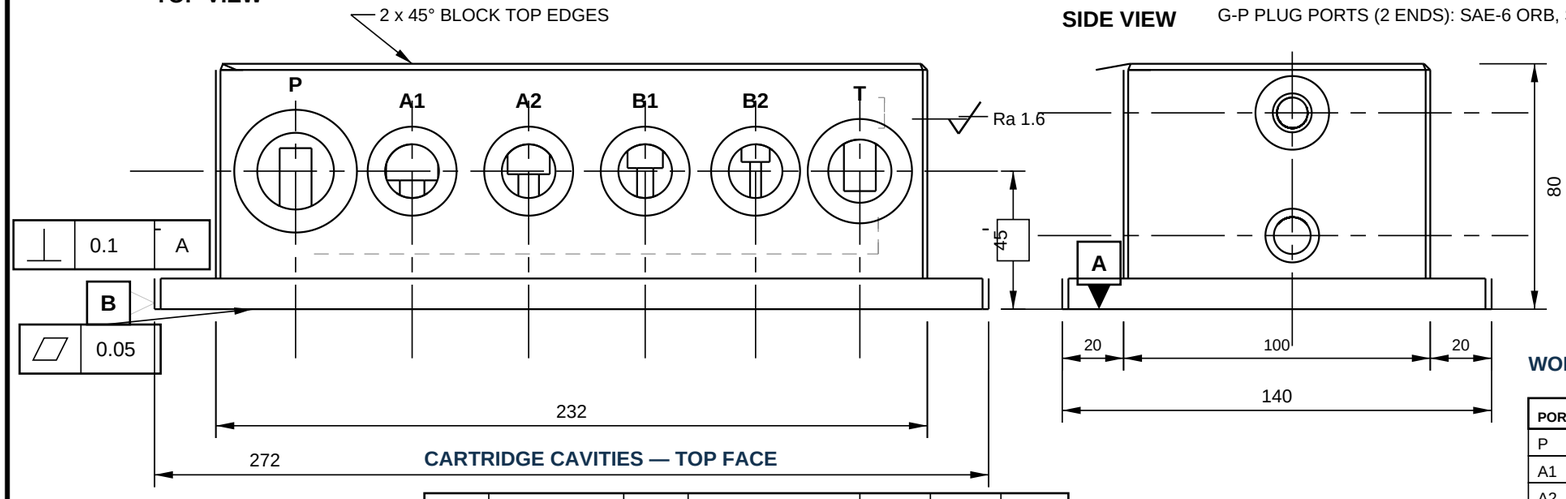

SIDE VIEW

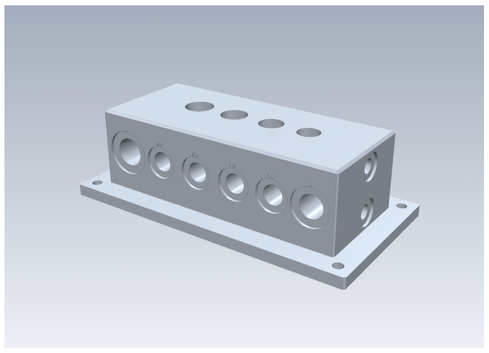

PICTORIAL — SHADED RENDER OF THE MODEL

FRONT VIEW

CARTRIDGE CAVITIES — TOP FACE

CAV	C'BORE Ø×DEP	BORE Ø	DEPTH FROM TOP FACE	PILOT Ø	FROM B	FROM C
CAV-1	26 × 14	18	38	10	84	75
CAV-2	24 × 14	15	36	9	122	75
CAV-3	22 × 14	13	34	8	160	75
CAV-4	20 × 14	11	32	7	196	75

POSITIONS FROM B/C ARE BASIC. PILOT CONCENTRIC TO C'BORE Ø0.05. SEALING BORES Ra 1.6.

FLOW PATH: P -> G-P GALLERY -> CAV-1..4 PILOTS; CAV BORES -> A1/A2/B1/B2; CAV COUNTERBORES -> G-T GALLERY -> T. ALL INTERNAL OPENINGS VERIFIED IN MODEL.

SAMPLE WORK — RECREATED FOR PORTFOLIO USE ONLY. NO CLIENT OR EMPLOYER CONFIDENTIAL CONTENT.

WORK PORTS — FRONT FACE (DEPTHS FROM FACE)

PORT	SAE	THREAD	DRILL Ø	THD DEPTH	DRILL DEPTH	SF Ø	SF DEPTH	FROM B
P	SAE-12	1-1/16-12 UNF	25.0	17.5	58	40	2.5	46
A1	SAE-8	3/4-16 UNF	17.5	14.3	58	29	2.5	84
A2	SAE-8	3/4-16 UNF	17.5	14.3	58	29	2.5	122
B1	SAE-8	3/4-16 UNF	17.5	14.3	58	29	2.5	160
B2	SAE-8	3/4-16 UNF	17.5	14.3	58	29	2.5	196
T	SAE-10	7/8-14 UNF	20.6	15.9	58	34	2.5	230

6x WORK PORTS | ⌖ | Ø 0.25 | A | B | C | (THREAD AXIS)

UNLESS OTHERWISE SPECIFIED:

DIMENSIONS ARE IN MILLIMETRES
NO DECIMAL PLACE: ±0.5
TOLERANCES: .X ±0.5
.XX ±0.25
.XXX ±0.13
ANGLES: ±1°
BREAK ALL EDGES 0.3 MAX
SURFACE FINISH Ra 3.2 UNLESS NOTED
INTERPRET PER ASME Y14.5-2018

DATUM A DESIGN
CAD DESIGN & DRAFTING SERVICES

SAMPLE WORK

SAMPLE WORK — NOT FOR MANUFACTURE.

TITLE
HYDRAULIC MANIFOLD BLOCK

DRAWN	DATE	PROJECTION	REV
DATUM A DESIGN	2026-11-27	THIRD ANGLE	A

DRAWING NO.	MATERIAL	SCALE	SHEET
DAD-SMP-004	STEEL 1045	1:2	1 OF 1

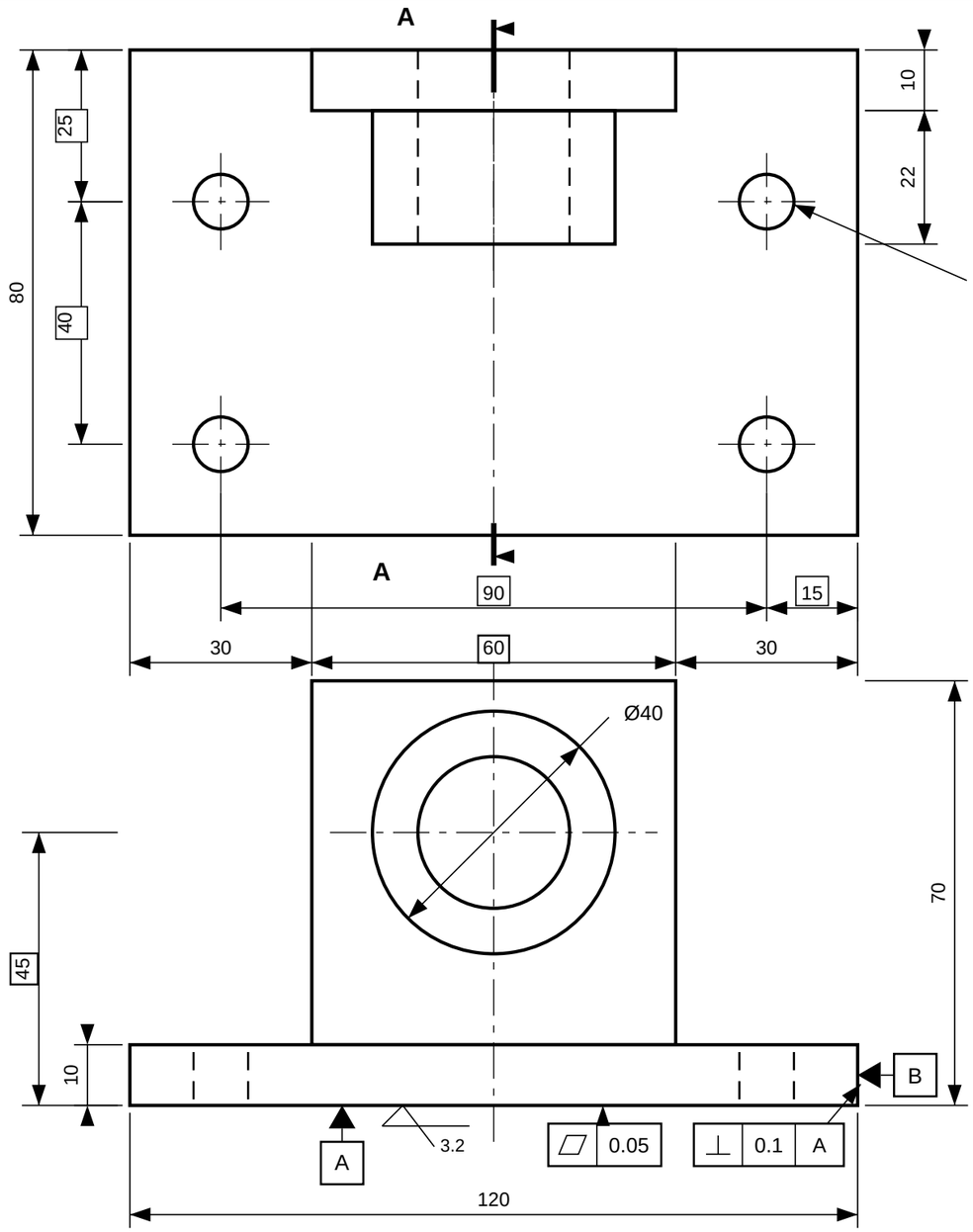

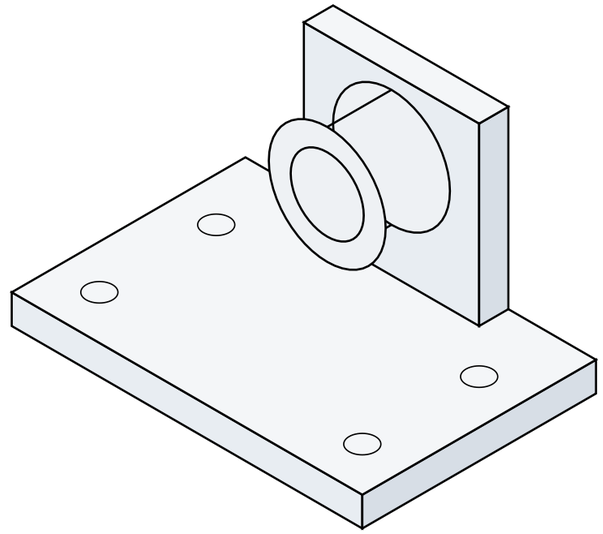

PICTORIAL VIEW — NOT TO SCALE

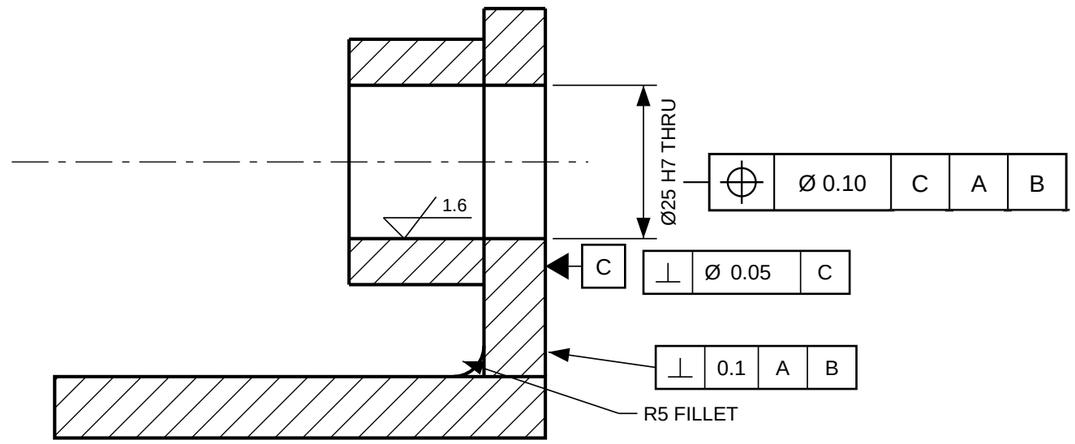

SECTION A-A

SCALE 1:1

NOTES:

1. ALL DIMENSIONS IN MILLIMETRES.
2. BREAK ALL SHARP EDGES 0.3 MAX UNLESS NOTED.
3. WALL-TO-BASE FILLET R5 (SEE SECTION A-A).
4. FINISH: CLEAR ANODIZE.
5. SAMPLE DRAWING — RECREATED FOR PORTFOLIO USE.
6. Ø25 H7 BORE: DIMENSIONS APPLY AFTER ANODIZE.

SAMPLE WORK — RECREATED FOR PORTFOLIO USE ONLY. NO CLIENT OR EMPLOYER CONFIDENTIAL CONTENT.

UNLESS OTHERWISE SPECIFIED:

DIMENSIONS ARE IN MILLIMETRES
NO DECIMAL PLACE: ±0.5
TOLERANCES: .X ±0.5
.XX ±0.25
.XXX ±0.13
ANGLES: ±1°
BREAK ALL EDGES 0.3 MAX
SURFACE FINISH Ra 3.2 UNLESS NOTED
INTERPRET PER ASME Y14.5-2018

DATUM A DESIGN

CAD DESIGN & DRAFTING SERVICES

SAMPLE WORK

SAMPLE WORK — NOT FOR MANUFACTURE.

TITLE

MOUNTING BRACKET

DRAWN	DATE	PROJECTION	REV
DATUM A DESIGN	2026-11-27	THIRD ANGLE	A

DRAWING NO.	MATERIAL	SCALE	SHEET
DAD-SMP-001	AL 6061-T6	1:1	1 OF 1

ASSEMBLED VIEW

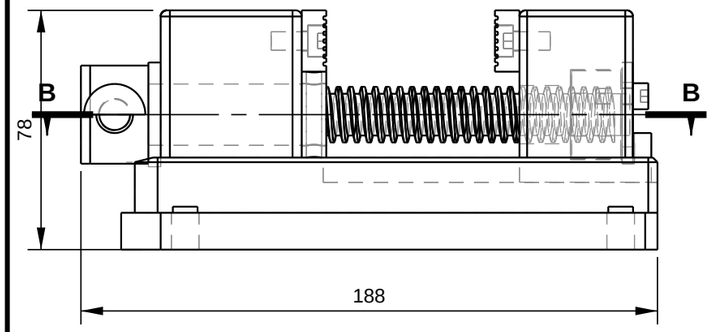

SECTION B-B

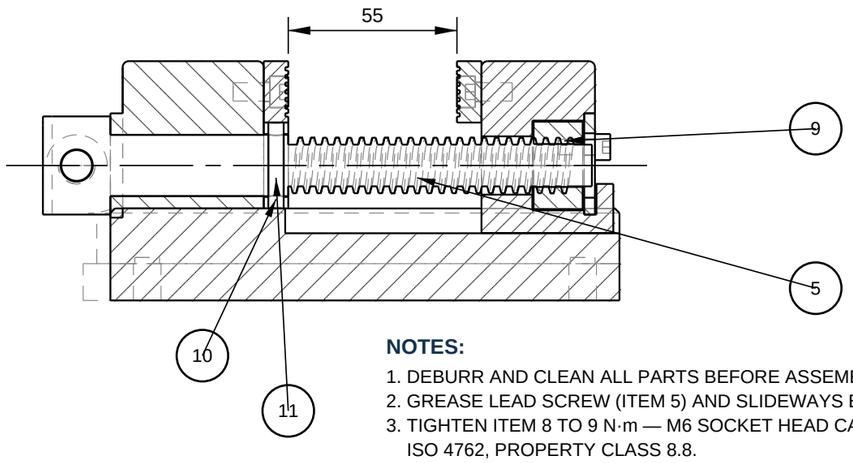

EXPLODED VIEW

(ISOMETRIC VIEW NTS) — FROM THE MODEL, PARTS SEPARATED ALONG THE SCREW AXIS

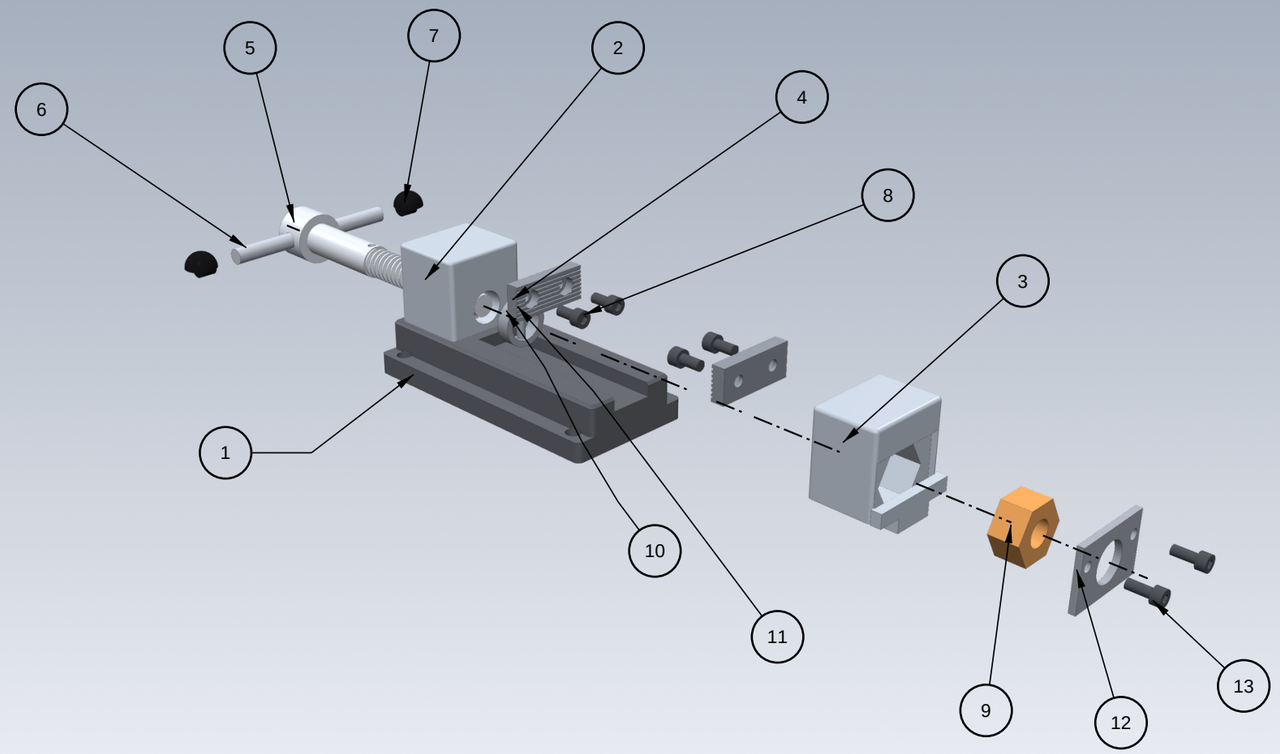

BILL OF MATERIALS

ITEM	PART NAME	MATERIAL	QTY	REMARKS
1	BASE	CAST IRON ASTM A48 CL30	1	POWDER COAT, BLK
2	FIXED JAW BODY	STEEL 1045	1	
3	SLIDING JAW	STEEL 1045	1	
4	JAW PLATE	STEEL 4140, HARDENED	2	SERRATED, 50-55 HRC
5	LEAD SCREW	STEEL 4140	1	Tr18x4 (ISO 2904)
6	HANDLE BAR	STEEL 1018	1	
7	HANDLE KNOB	ACETAL	2	PRESS FIT ON ITEM 6
8	CAP SCREW M6x16	ALLOY STEEL	4	ISO 4762, CLASS 8.8
9	LEAD SCREW NUT	BRONZE C83600	1	RETAINED BY ITEM 12
10	THRUST COLLAR	STEEL 4140	1	PINNED TO ITEM 5 BY 11
11	CROSS PIN D5x28	STEEL	1	REAMER FIT, D5 H7/k6
12	NUT RETAINING PLATE	STEEL 1045	1	CLOSES ITEM 3 POCKET
13	CAP SCREW M5x12	ALLOY STEEL	2	ISO 4762, CLASS 8.8

KEY DIMENSIONS (MM):

OVERALL LENGTH: 188 (TO HUB END)
OVERALL WIDTH: 122 ACROSS HANDLE (BASE 80)
OVERALL HEIGHT: 78
JAW OPENING: 55

NOTES:

1. DEBURR AND CLEAN ALL PARTS BEFORE ASSEMBLY.
2. GREASE LEAD SCREW (ITEM 5) AND SLIDEWAYS BEFORE USE.
3. TIGHTEN ITEM 8 TO 9 N·m — M6 SOCKET HEAD CAP SCREWS, ISO 4762, PROPERTY CLASS 8.8.
4. CHECK SLIDING JAW TRAVELS FULL STROKE WITHOUT BINDING.
5. JAW PLATES (ITEM 4) HARDENED TO 50-55 HRC.
6. SAMPLE ASSEMBLY — RECREATED FOR PORTFOLIO USE ONLY.
7. LEAD SCREW AXIALLY RETAINED BY THRUST COLLAR AT FIXED JAW; NUT HEX POCKET IN SLIDING JAW PREVENTS ROTATION.
8. THRUST COLLAR (ITEM 10) PINNED TO LEAD SCREW BY D5 CROSS PIN (ITEM 11); COLLAR BEARS ON FIXED JAW REAR FACE.
9. BRONZE NUT (ITEM 9): HEX A/F 28.6 IN ITEM 3 POCKET A/F 29.3, CLEARANCE FIT, RETAINED AXIALLY BY ITEM 12 PLATE.
10. CROSS PIN (ITEM 11): D5 H7/k6 REAMER FIT IN ITEMS 5 AND 10.
11. KNOBS (ITEM 7): D10 BORE, H7/p6 LIGHT PRESS FIT ON ITEM 6.
12. LEAD SCREW JOURNAL: D20 g6 RUNNING FIT IN ITEM 2 BORE D20 H7.
13. ITEM 10 BORE D20.5 CLEARANCE ON ITEM 5 JOURNAL, PINNED BY ITEM 11.
14. NUT RETAINING PLATE (ITEM 12) SECURED BY 2x M5 CAP SCREWS (ITEM 13); TIGHTEN TO 5 N·m.

UNLESS OTHERWISE SPECIFIED:

DIMENSIONS ARE IN MILLIMETRES
NO DECIMAL PLACE: ±0.5
TOLERANCES: .X ±0.5
.XX ±0.25
.XXX ±0.13
ANGLES: ±1°
BREAK ALL EDGES 0.3 MAX
SURFACE FINISH Ra 3.2 UNLESS NOTED
INTERPRET PER ASME Y14.5-2018

SAMPLE WORK — RECREATED FOR PORTFOLIO USE ONLY. NO CLIENT OR EMPLOYER CONFIDENTIAL CONTENT.

DATUM A DESIGN
CAD DESIGN & DRAFTING SERVICES
SAMPLE WORK
SAMPLE WORK — NOT FOR MANUFACTURE.

TITLE
BENCH VISE ASSEMBLY

DRAWN	DATE	PROJECTION	REV
DATUM A DESIGN	2026-11-27	THIRD ANGLE	A

DRAWING NO.	MATERIAL	SCALE	SHEET
DAD-SMP-002	SEE BOM	1:2	1 OF 1

MODEL EVIDENCE — PARAMETRIC MODEL FEATURES AND SECTIONS

Section views cut through the live parametric models behind the manifold and vise drawings.

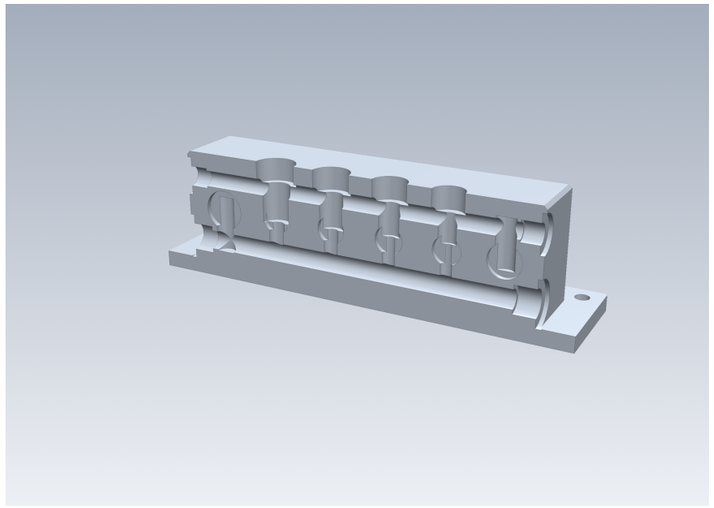

Hydraulic manifold — section A-A (single solid, 21 features)

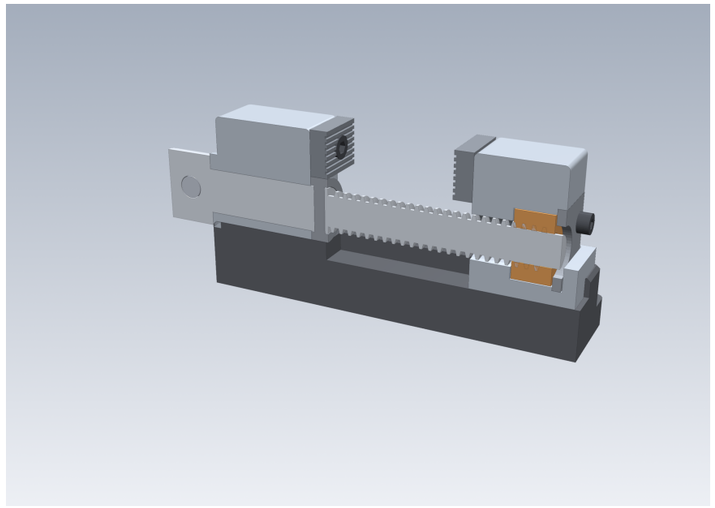

Bench vise — section B-B (19 named solids, 13 BOM items)

Sample models recreated for portfolio use; STEP files manifold-model.step and vise-assembly.step are included with this portfolio.

```
FEATURE LIST - HYDRAULIC MANIFOLD BLOCK (DWG DAD-SMP-004)
Modelled parametrically, feature by feature - not a mesh or a scan.
Material: STEEL 1045. Units: mm. Single solid, 21 features.
Overall: 272 x 140 flange footprint x 80 high; block 232 x 100 x 70.
Volume 1,802,828 mm^3 - mass 14.15 kg (steel).

1. Base flange pad 272 x 140 x 10, corners chamfered 2 x 45 deg
2. Manifold block pad 232 x 100 x 70 on the flange
3. Chamfer: 4 block vertical corner edges, 1.5 x 45 deg
4. Chamfer: block top perimeter edges, 2 x 45 deg
5. Block fused to base flange (single solid)
6. CAV-1 X=64: counterbore D26 x 14, bore D18 to 38 deep, pilot D10 down to Z=14
7. CAV-2 X=102: counterbore D24 x 14, bore D15 to 36 deep, pilot D9 down to Z=14
8. CAV-3 X=140: counterbore D22 x 14, bore D13 to 34 deep, pilot D8 down to Z=14
9. CAV-4 X=176: counterbore D20 x 14, bore D11 to 32 deep, pilot D7 down to Z=14
10. Port P (SAE-12 ORB, 1-1/16-12 UNF) X=26: tap drill D25 x 58 deep, spotface D40 x 2.5
11. Port A1 (SAE-8 ORB, 3/4-16 UNF) X=64: tap drill D17.5 x 58 deep, spotface D29 x 2.5
12. Port A2 (SAE-8 ORB, 3/4-16 UNF) X=102: tap drill D17.5 x 58 deep, spotface D29 x 2.5
13. Port B1 (SAE-8 ORB, 3/4-16 UNF) X=140: tap drill D17.5 x 58 deep, spotface D29 x 2.5
14. Port B2 (SAE-8 ORB, 3/4-16 UNF) X=176: tap drill D17.5 x 58 deep, spotface D29 x 2.5
15. Port T (SAE-10 ORB, 7/8-14 UNF) X=210: tap drill D20.6 x 58 deep, spotface D34 x 2.5
16. Pressure riser D12 at (X=26, Y=55), Z 7.5 to 42.5, joins port P to gallery G-P
17. Tank riser D12 at (X=210, Y=55), Z 29 to 60, joins port T to gallery G-T
18. Gallery G-P D12 at (Y=55, Z=14), SAE-6 ORB plug ports both ends (SF D24 x 2.5, drill D12.7 x 14)
19. Gallery G-T D10 at (Y=55, Z=54), SAE-6 ORB plug ports both ends (SF D24 x 2.5, drill D12.7 x 14)
20. 4x mounting holes D9 THRU in flange at (-8,-8), (240,-8), (-8,108), (240,108) - 248 x 116 pattern, 12 from every edge
21. Port IDs engraved 0.6 deep on front face: P, A1, A2, B1, B2, T

FLOW PATH (verified by boolean intersection of the void tools):
- P port -> pressure riser -> gallery G-P -> all four cavity pilots (6 mm into the G-P bore).
- Cavity main bores -> work ports A1/A2/B1/B2 (each cavity aligned over its port).
- Cavity counterbore annuli -> gallery G-T -> tank riser -> T port (>= 3 mm overlap).
- Gallery ends are threaded plug ports: G-P SAE-6 ORB, G-T SAE-6 ORB.
- Intersection volumes (pilot/G-P, port/bore, cbore/G-T), all OPEN:
  CAV-1 426/1822/508, CAV-2 352/1157/468, CAV-3 284/731/428, CAV-4 221/414/387 mm^3.
- Minimum webs: 4.7 mm at the T riser, 6.25 mm at the work ports.

Port threads are modelled by their tap drills and spotfaces (cosmetic convention);
internal galleries are true cross-drilled solids, as drawn in SECTION A-A.
```

```
FEATURE LIST - BENCH VISE ASSEMBLY (DWG DAD-SMP-002)
Modelled parametrically as a true multi-solid assembly - one solid
per BOM piece: 19 named solids covering the 13 BOM items (jaw plates,
knobs and cap screws counted per piece; item 13 is two screws).
Overall (model bounding box): 188 long (X) x 122 wide (Y) x 78 high (Z).
Units: mm. Screw axis along X at Z=44. Jaw opening 55 (faces at X=58 / X=113).
1. BASE - cast iron ASTM A48 CL30, powder coat black. Foot plate 166 x 80 x 12, R4
corners; upper body 166 x 60 x 18; slideway 26 wide x 8 deep; 4x D9 THRU, 142 x 64.
2. FIXED JAW BODY - steel 1045. Block 46 x 52 x 48 on the base, R3/R2 fillets,
D34 front boss, D20 H7 through bore for the lead screw journal.
3. SLIDING JAW - steel 1045. Head 37 x 52 x 48, 24-wide tongue in the base
slideway; hex pocket for the nut; 48 x 33 x 3.5 rear recess seating item 12.
4. JAW PLATE x2 - steel 4140, hardened 50-55 HRC. 48 x 20 x 8, 7 serration
grooves on the working face, 2x D6.5 holes with D10.5 x 6 counterbores.
5. LEAD SCREW - steel 4140. D32 handle hub, D20 g6 journal running in the
D20 H7 bore (H7/g6 fit), D5 cross pin hole; true helical Tr18x4 thread, X=58 to 152.
6. HANDLE BAR - steel 1018, D10 x 112 through the hub.
7. HANDLE KNOB x2 - acetal. D20 ball on a D12 neck, press fit on the bar ends.
8. CAP SCREW M6x16 x4 - alloy steel, ISO 4762, class 8.8, 5 mm hex socket;
tighten to 9 N.m.
9. LEAD SCREW NUT - bronze C83600. Hex 33 A/C (28.6 A/F) x 16 long, D14 bore,
clearance fit in the hex pocket (29.3 A/F), retained axially by item 12.
10. THRUST COLLAR - steel 4140. D28 x 8, bore D20.5 (clearance on the D20
journal); bears on the rear face of the fixed jaw, retaining the screw axially.
11. CROSS PIN - steel, D5 x 28. Pins collar (item 10) to the screw, D5 H7/k6 fit.
12. NUT RETAINING PLATE - steel 1045. 48 x 33 x 3.5, seated flush in the
sliding jaw rear recess, closing the nut pocket; D21 centre hole clears the screw.
13. CAP SCREW M5x12 x2 - alloy steel, ISO 4762, class 8.8, 4 mm hex socket;
secures item 12 into tapped holes in the sliding jaw; tighten to 5 N.m.
The Tr18x4 thread is real helical geometry; the nut's internal thread is cosmetic.
```

SAMPLE WORK — RECREATED FOR PORTFOLIO USE ONLY. NO CLIENT OR EMPLOYER CONFIDENTIAL CONTENT.

DATUM A DESIGN
CAD DESIGN & DRAFTING SERVICES
SAMPLE WORK

SAMPLE WORK — NOT FOR MANUFACTURE.

TITLE: **MODEL EVIDENCE - FEATURES & SECTIONS**			
DRAWN: DATUM A DESIGN	DATE: 2026-11-27	PROJECTION: THIRD ANGLE	REV: A
DRAWING NO.: DAD-SMP-005	MATERIAL: SEE NOTES	SCALE: NTS	SHEET: 1 OF 1

POWER CIRCUIT — 480V, 3 PHASE, 60 Hz

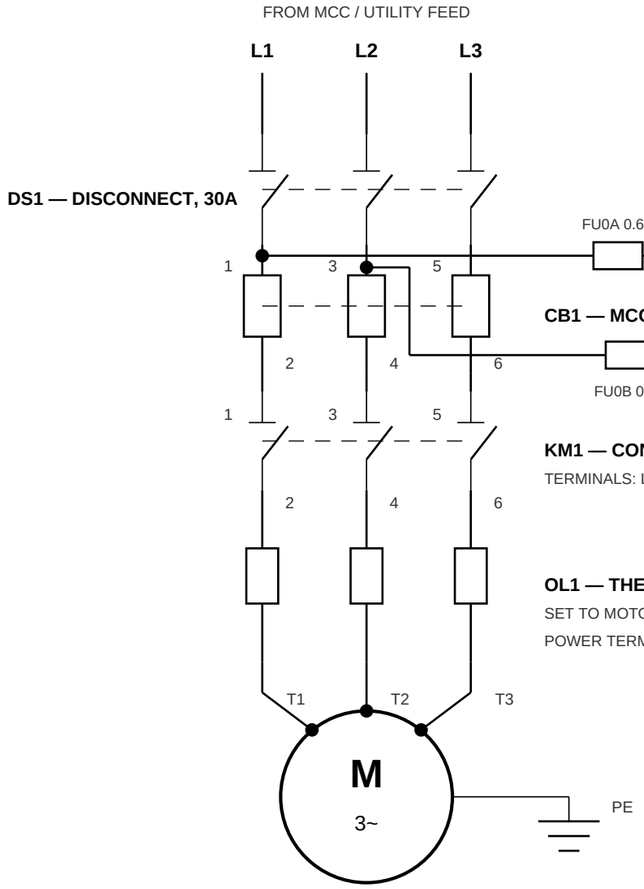

COMPONENT SCHEDULE — TYPICAL, OR EQUIVALENT

DESIG	SPECIFICATION
DS1	30 A, 600 V, NON-FUSED DISCONNECT SWITCH
CB1	20 A, 480 V, MCCB
KM1	CONTACTOR 9 A AC-3, 120 V COIL
OL1	OVERLOAD RELAY ADJ 6-10 A — SET PER MOTOR NAMEPLATE FLA
CPT1	CONTROL TRANSFORMER 100 VA, 480:120 V
FU0	FUSE 0.6 A TIME-DELAY, CLASS CC (FU0A / FU0B)
FU1	FUSE 1 A, CLASS CC

CONTROL CIRCUIT — 120 VAC

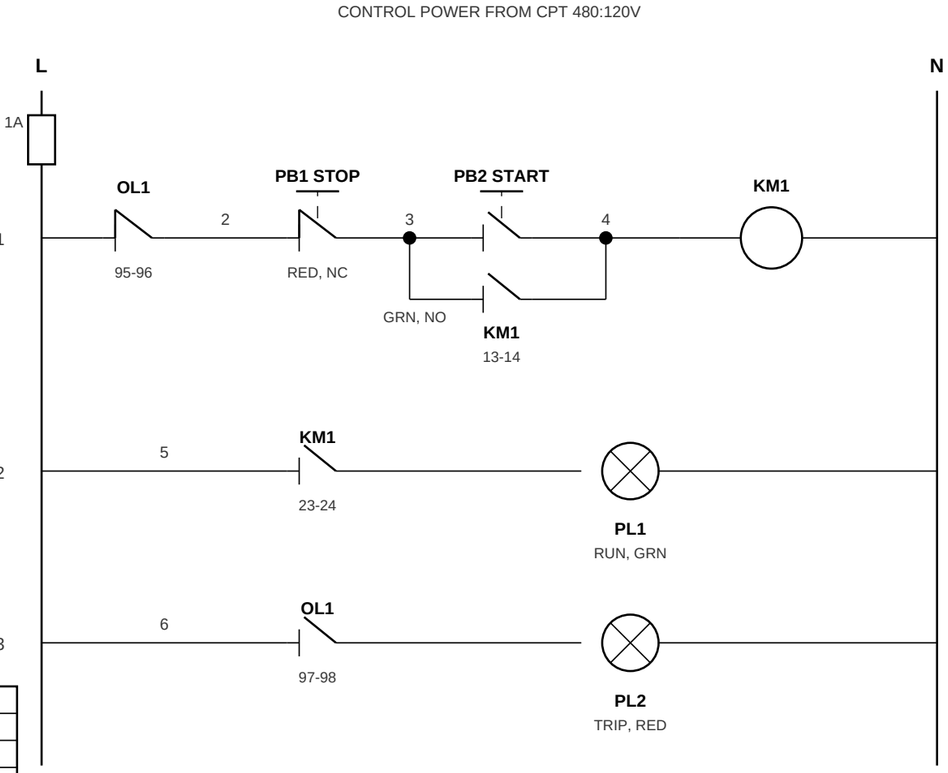

PANEL LAYOUT — FRONT VIEW (NTS)

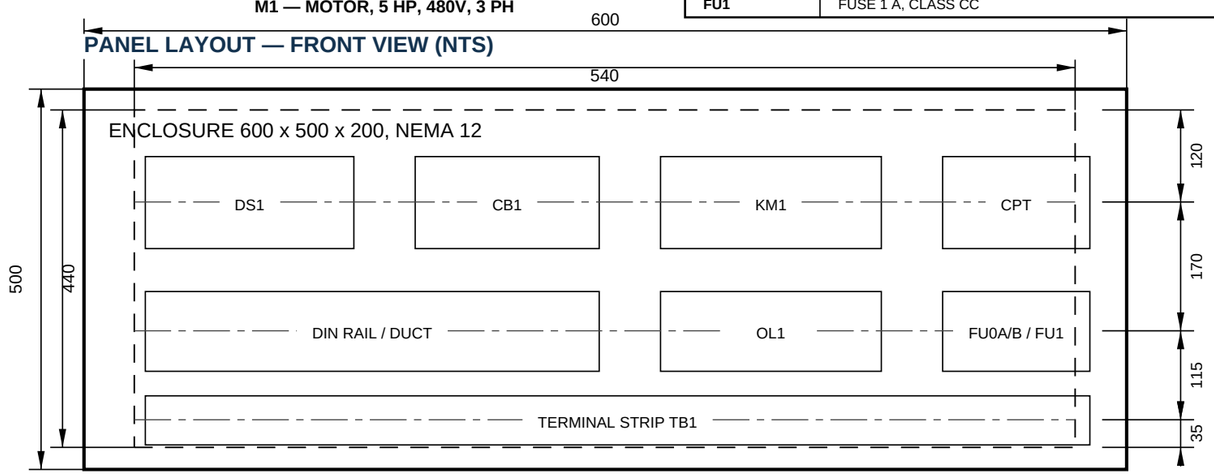

BACKPLATE 540 x 440 — 30 CLEARANCE ALL ROUND
DOOR (NOT SHOWN): PB1, PB2, PL1, PL2 MOUNTED ON DOOR.
FUSE BLOCKS: FU0A/FU0B 0.6A TD (CPT PRI.), FU1 1A (CONTROL) ON BACK PANEL.

TB1 TERMINAL SCHEDULE

TERM	WIRE	DESTINATION
1	L1	INCOMING FEED TO DS1
2	L2	INCOMING FEED TO DS1
3	L3	INCOMING FEED TO DS1
4	T1	OL1 OUT TO MOTOR M1
5	T2	OL1 OUT TO MOTOR M1
6	T3	OL1 OUT TO MOTOR M1
7	L	CPT SEC. TO LADDER L RAIL — INTERNAL
8	N	CPT SEC. TO LADDER N RAIL — INTERNAL
9	PE	GROUND TO MOTOR FRAME
10	PE	INCOMING PE FROM FEED

NOTES:

1. CONTROL VOLTAGE 120 VAC FROM CPT1 SECONDARY, FUSED 1A (FU1). CPT PRIMARY FUSED 0.6A TD IN BOTH LEGS (FU0A/FU0B), TAPPED ON THE LOAD SIDE OF DS1.
2. WIRE: POWER 12 AWG THHN BLACK; CONTROL 16 AWG RED; GROUND GREEN/YELLOW. 600V RATED THROUGHOUT.
3. SET OL1 TO MOTOR NAMEPLATE FLA BEFORE START-UP.
4. TB1 FIELD TERMINALS: 1-3 INCOMING FEED, 4-6 MOTOR, 9-10 PE; 7-8 INTERNAL (CONTROL L/N). SEE TB1 SCHEDULE.
5. SAMPLE SCHEMATIC — RECREATED FOR PORTFOLIO USE.
6. MOTOR FLA 7.6 A PER NEC TABLE 430.250, 460 V COLUMN (5 HP, 480 V SYSTEM); OVERLOAD SET PER MOTOR NAMEPLATE.
7. SYMBOLS PER IEC 60617; CONDUCTOR SIZING AND PROTECTION PER NEC — COMMON NORTH AMERICAN PANEL PRACTICE.
8. CPT 100 VA: PRI 0.21 A, SEC 0.83 A. FU0 0.6 A TD PER NEC 450.3(B) (300% MAX, PRI <2 A). KM1 COIL INRUSH 70 VA, SEALED 8 VA; LAMPS 2x2 VA; FU1 1 A.
9. CB1 20 A MCCB PER NEC 430.52 (250% OF 7.6 A FLA = 19 A; NEXT STANDARD SIZE 20 A).

SAMPLE WORK — RECREATED FOR PORTFOLIO USE ONLY. NO CLIENT OR EMPLOYER CONFIDENTIAL CONTENT.

DATUM A DESIGN
CAD DESIGN & DRAFTING SERVICES
SAMPLE WORK

SAMPLE WORK — NOT FOR MANUFACTURE.

TITLE
MOTOR CONTROL PANEL SCHEMATIC

DRAWN	DATE	PROJECTION	REV
DATUM A DESIGN	2026-11-27	THIRD ANGLE	A

DRAWING NO.	MATERIAL	SCALE	SHEET
DAD-SMP-003	N/A	NTS	1 OF 1

ELM RIDGE SUBSTATION — ONE-LINE DIAGRAM

69 kV TO 12.47 kV DISTRIBUTION SUBSTATION — TWO TRANSFORMERS · FOUR FEEDERS · SECTIONALIZED 12.47 kV BUS

69 kV UTILITY LINE — 3 PH, 60 HZ

LA-1 — SURGE ARRESTERS (3)
54 kV DUTY-CYCLE RATING · MCOV 42 kV

89-L1 — DISCONNECT SWITCH
69 kV · 1200 A · MOTOR-OPERATED

LINE CTs — 600:5

52-L1 — CIRCUIT BREAKER
69 kV · 1200 A · 40 kAIC

89-L2 — DISCONNECT SWITCH
69 kV · 1200 A

69 kV BUS — 1200 A

BUS LA — SURGE ARRESTERS
54 kV DUTY-CYCLE · MCOV 42 kV

PROTECTION — LINE
51 — OVERCURRENT
FROM LINE CTs 600:5
TRIPS 52-L1

89-T1 — DISCONNECT SWITCH
69 kV · 1200 A · MOTOR-OPERATED

HV CTs — 200:5

52-T1 — CIRCUIT BREAKER
69 kV · 1200 A · 40 kAIC

PROTECTION — T1
87T — XFMR DIFFERENTIAL (HV + LV CTs)
63 — SUDDEN PRESSURE
51 — BACKUP OC (HV CTs)
TRIPS VIA 86T LOCKOUT — SEE 007

89-T2 — DISCONNECT SWITCH
69 kV · 1200 A · MOTOR-OPERATED

HV CTs — 200:5

BUS VT SET (3)
69,000:120 V

52-T2 — CIRCUIT BREAKER
69 kV · 1200 A · 40 kAIC

LA-T1 — SURGE ARRESTER
54 kV DUTY-CYCLE · MCOV 42 kV

PROTECTION — T2
87T — XFMR DIFFERENTIAL (HV + LV CTs)
63 — SUDDEN PRESSURE
51 — BACKUP OC (HV CTs)
TRIPS VIA 86T LOCKOUT — SEE 007

LA-T2 — SURGE ARRESTER
54 kV DUTY-CYCLE · MCOV 42 kV

T1 — POWER TRANSFORMER
10 MVA OA / 12.5 MVA FA
69,000D — 12,470Y/7,200 V
Z = 7.5% · ONAN / ONAF

T2 — POWER TRANSFORMER
10 MVA OA / 12.5 MVA FA
69,000D — 12,470Y/7,200 V
Z = 7.5% · ONAN / ONAF

LA-T1-LV — SURGE ARRESTER

LA-T2-LV — SURGE ARRESTER

TO 120/240 V STATION SERVICE PANEL

LV CTs — 800:5

SS-1 — STATION SERVICE XFMR
25 kVA · 12,470–120/240 V
FUSED SWITCH 89-SS

52-M1 — MAIN BREAKER
12.47 kV · 1200 A · 25 kAIC

LV CTs — 800:5

52-M2 — MAIN BREAKER
12.47 kV · 1200 A · 25 kAIC

52-BT — BUS TIE BREAKER
1200 A · 25 kAIC

89-BT1 **89-BT2**

12.47 kV BUS — SECTION A — 1200 A

12.47 kV BUS — SECTION B — 1200 A

89-F1 — ISOLATOR

89-F2 — ISOLATOR

PT-A — 7,200:120 V

PT-B — 7,200:120 V

89-F3 — ISOLATOR

89-F4 — ISOLATOR

52-F1 — BREAKER
600 A · 25 kAIC

52-F2 — BREAKER
600 A · 25 kAIC

52-F3 — BREAKER
600 A · 25 kAIC

52-F4 — BREAKER
600 A · 25 kAIC

CTs — 600:5

CTs — 600:5

CTs — 600:5

CTs — 600:5

27/59 — BUS VOLTAGE (SECTION A)
27 TRIPS FEEDERS, TIME DELAYED + ALARM
59 ALARM ONLY

27/59 — BUS VOLTAGE (SECTION B)
27 TRIPS FEEDERS, TIME DELAYED + ALARM
59 ALARM ONLY

F1 — 12.47 kV FEEDER (SECTION A)
PROTECTION: 50/51 · 51N · 79

F2 — 12.47 kV FEEDER (SECTION A)
PROTECTION: 50/51 · 51N · 79

F3 — 12.47 kV FEEDER (SECTION B)
PROTECTION: 50/51 · 51N · 79

F4 — 12.47 kV FEEDER (SECTION B)
PROTECTION: 50/51 · 51N · 79

DESIGN DATA

SYSTEM: 69 kV TO 12.47 kV, 3 PH, 60 HZ.
AVAILABLE FAULT CURRENT: 40 kA AT 69 kV BUS (UTILITY SOURCE); 6.2 kA AT 12.47 kV BUS PER TRANSFORMER, 12.4 kA WITH BOTH IN PARALLEL (T1/T2 Z = 7.5%).
EQUIPMENT INTERRUPTING RATINGS: 40 kA / 25 kA.
BIL: 350 kV (69 kV) / 110 kV (12.47 kV).
CONTROL POWER: 125 V DC BATTERY AND CHARGER.

NOTES:

1. SAMPLE WORK — RECREATED FOR PORTFOLIO USE ONLY. NO CLIENT OR EMPLOYER CONFIDENTIAL CONTENT.
2. GROUND GRID PER IEEE STD 80. ALL EQUIPMENT AND STRUCTURES GROUNDED TO THE STATION GRID.
3. TRANSFORMER BAY T2 IS IDENTICAL TO BAY T1 IN EQUIPMENT, RATINGS AND PROTECTION.
4. 87T AND 63 TRIP THROUGH THE 86T LOCKOUT RELAY. PROTECTION AND CONTROL SCHEMATICS: SEE DAD-SMP-007; PANEL WIRING: SEE DAD-SMP-008.
5. STATION SERVICE FROM SECTION A VIA SS-1. 125 V DC BATTERY AND CHARGER LOCATED IN THE CONTROL HOUSE.
6. DEVICE NUMBERS PER IEEE C37.2. SYMBOLS PER IEEE STD 315.

DATUM A DESIGN
CAD DESIGN & DRAFTING SERVICES

SAMPLE WORK
SAMPLE WORK — NOT FOR CONSTRUCTION.
Recreated sample for portfolio use only.

TITLE
SUBSTATION ONE-LINE DIAGRAM

DRAWN	DATE	PROJECTION	REV
DATUM A DESIGN	2026-11-27	N/A	A
DRAWING NO.	MATERIAL	SCALE	SHEET
DAD-SMP-006	N/A	NTS	1 OF 1

AC SCHEMATIC — CT AND VT SECONDARY CIRCUITS (TRANSFORMER T1)

ELM RIDGE SUBSTATION · ALL RELAYS MICROPROCESSOR TYPE · CT SECONDARIES GROUNDED AT ONE POINT ONLY, AT THE RELAY PANEL

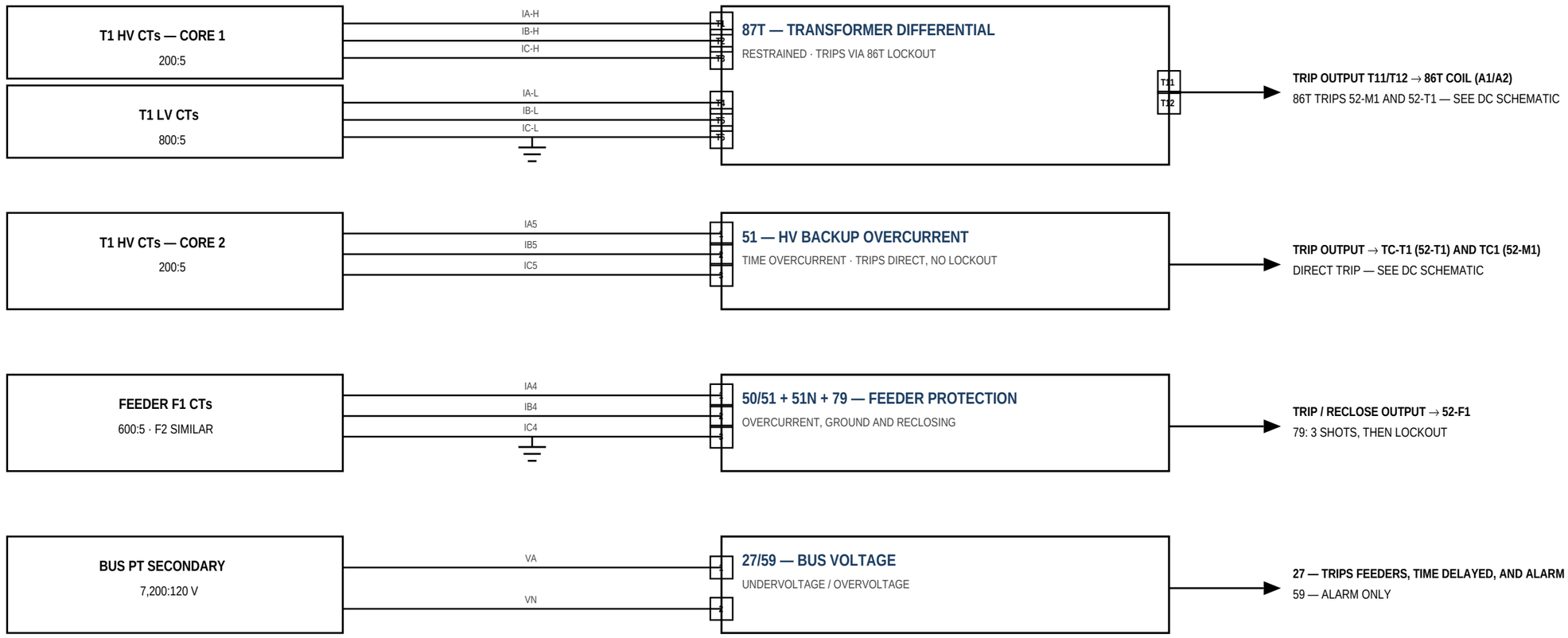

DC SCHEMATIC — 125 V DC CONTROL (PANEL P1)

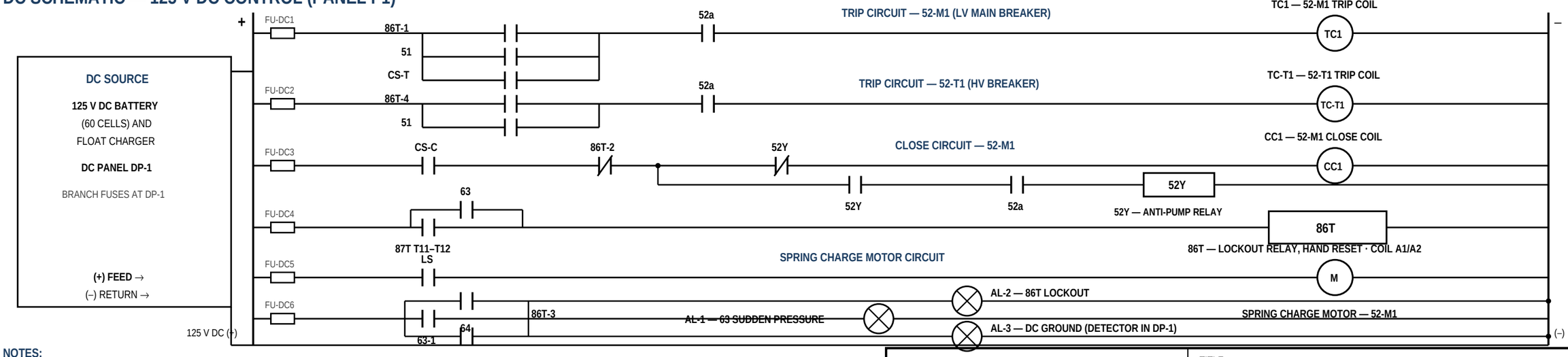

NOTES:

1. 87T OUTPUT T11/T12 DRIVES 86T COIL A1/A2; 63 CONTACT IN PARALLEL. 86T-1 TRIPS 52-M1, 86T-4 TRIPS 52-T1, 86T-2 (NC) BLOCKS CLOSING, 86T-3 ALARMS (AL-2).
2. 51 TRIPS 52-T1 AND 52-M1 DIRECTLY (NO LOCKOUT). LINE-BAY 51 TRIPS 52-L1 ONLY; IT IS IN THE LINE CONTROL PANEL (NOT SHOWN).
3. 27 TRIPS FEEDERS, TIME DELAYED, AND ALARMS. 59 ALARMS ONLY. SETTINGS BY PROTECTION STUDY (NOT SHOWN).
4. T2 PROTECTION AND CONTROL IDENTICAL — PANEL P2, DEVICE SUFFIX -2.
5. CIRCUIT REFS TC1, CC1, TC-T1 AND 86T-1 TO 86T-4 ARE REUSED ON DAD-SMP-008.
6. SAMPLE WORK — RECREATED FOR PORTFOLIO USE ONLY. NO CLIENT OR EMPLOYER CONFIDENTIAL CONTENT.

DATUM A DESIGN

CAD DESIGN & DRAFTING SERVICES

SAMPLE WORK

SAMPLE WORK — NOT FOR CONSTRUCTION.

Recreated sample for portfolio use only.

TITLE

PROTECTION AND CONTROL SCHEMATICS

DRAWN	DATE	STANDARDS	REV
DATUM A DESIGN	2026-11-27	IEEE C37.2	A
DRAWING NO.	**MATERIAL**	**SCALE**	**SHEET**
DAD-SMP-007	N/A	NTS	1 OF 1

ELM RIDGE SUBSTATION — CONTROL PANEL P1 · TRANSFORMER T1 · 125 V DC CONTROL

Wiring diagram companion to one-line DAD-SMP-006 and schematics DAD-SMP-007. T2 panel P2 similar (device suffix -2).

BREAKER 52-M1 — INTERNAL WIRING (LV CABINET)

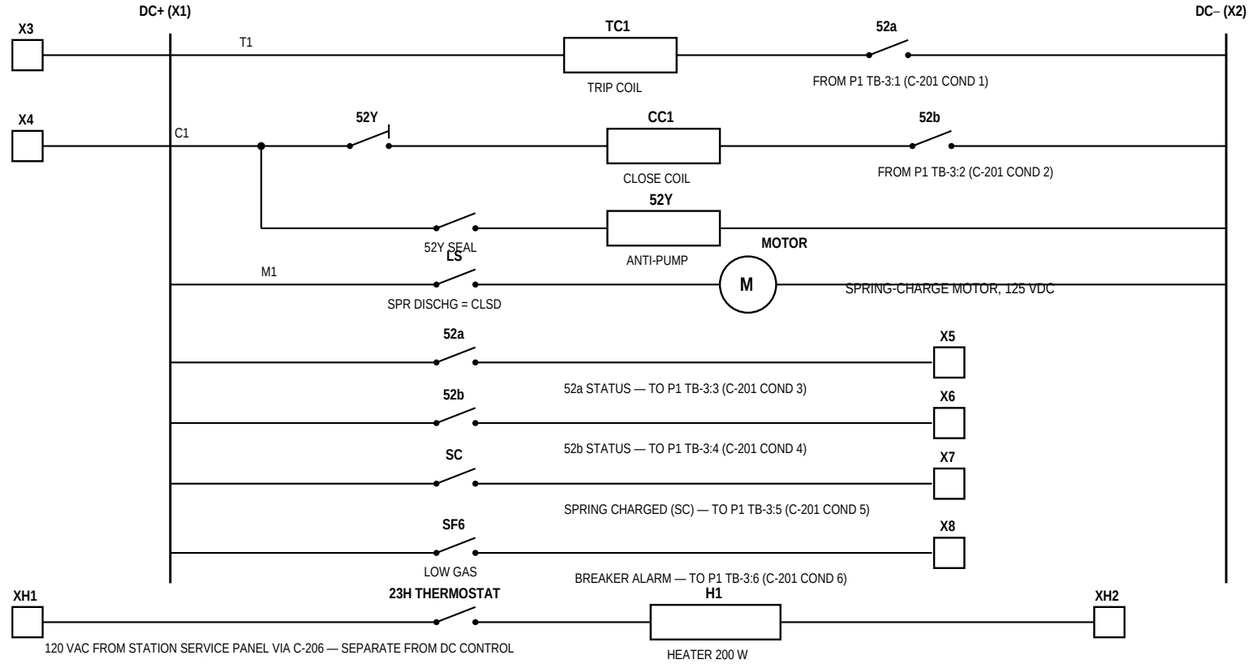

BREAKER 52-T1 — TRIP WIRING (FROM P1 VIA C-207)

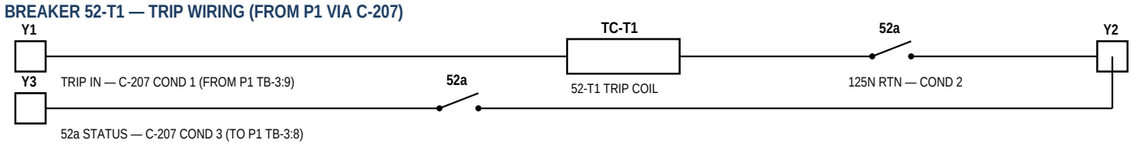

BREAKER CABINET TERMINAL STRIPS — SCHEDULE (52-M1: X · 52-T1: Y)

TERM	FUNCTION	CABLE / SOURCE
X1	DC+ IN	C-203 COND 1
X2	DC– IN	C-203 COND 2
X3	TRIP IN (TO TC1)	C-201 COND 1
X4	CLOSE IN (TO CC1)	C-201 COND 2
X5	52a STATUS OUT	C-201 COND 3
X6	52b STATUS OUT	C-201 COND 4
X7	SPRING CHARGED (SC) OUT	C-201 COND 5
X8	BREAKER ALARM OUT	C-201 COND 6
X9–X14	SPARES (X9–X12 LANDED)	C-201 COND 7–10
XH1 / XH2	HEATER L / N, 120 VAC	C-206 COND 1 / 2
Y1 / Y2	52-T1 TRIP IN / 125N RTN	C-207 COND 1 / 2
Y3	52-T1 52a STATUS OUT	C-207 COND 3

CABLE SCHEDULE

CABLE	FROM	TO	SIZE	REMARKS
C-201	P1 TB-3:1–6	52-M1 CAB X3–X8	12/C #12 AWG	CONTROL; COND 7–12 SPARES, CAPPED
C-202	JB-CT1 (AT 52-T1)	P1 TB-2:1–6	6/C #10 AWG	HV CT SECONDARY — DO NOT OPEN-CIRCUIT
C-203	P1 TB-1:3 / 4	52-M1 CAB X1 / X2	2/C #10 AWG	125 VDC BREAKER CONTROL POWER
C-204	DC PANEL DP-1	P1 TB-1:1 / 2	2/C #10 AWG	125 VDC PANEL FEED, FUSED 10 A AT DP-1
C-205	XFMR T1 63 CONTACT	P1 TB-3:7	2/C #12 AWG	SUDDEN PRESSURE — ALARM AL-1
C-206	STATION SERVICE PNL	52-M1 CAB XH1/XH2	2/C #12 AWG	HEATER, 120 VAC
C-207	P1 TB-3:9 / 10 / 8	52-T1 CAB Y1/Y2/Y3	4/C #12 AWG	52-T1 TRIP + STATUS; COND 4 SPARE

LV CT LEADS FROM 52-M1 BUSHING CTs TO JB-CT2 BY SWITCHGEAR SUPPLIER; JB-CT2 TO TB-2:7–12 BY PANEL SHOP, #10 AWG.

NOTES:

1. WIRE: CONTROL #12 AWG, CT AND DC POWER #10 AWG, 600 V CU. WIRE MARKERS MATCH SCHEMATIC REFS (DAD-SMP-007).
2. CT SECONDARIES GROUNDED AT ONE POINT ONLY — TB-2 TERM 13. DO NOT GROUND AT JB-CT1, JB-CT2 OR SWITCHGEAR.
3. TB-2 IS SHORTING TYPE. LINKS SHOWN OPEN (NORMAL). CLOSE ONLY TO SHORT CT SECONDARY BEFORE RELAY REMOVAL.
4. 86T LOCKOUT RELAY IS HAND-RESET. CONTACT 86T-2 (NC) BLOCKS 52-M1 CLOSING UNTIL 86T IS RESET.
5. HEATER IS 120 VAC FROM THE STATION SERVICE PANEL VIA C-206, SEPARATE FROM 125 VDC CONTROL.
6. SPARE CONDUCTORS CAPPED, TAPED AND IDENTIFIED AT BOTH ENDS.
7. LINE BAY 51 RELAY IS IN THE LINE CONTROL PANEL (NOT SHOWN).

SAMPLE WORK — RECREATED FOR PORTFOLIO USE ONLY. NO CLIENT OR EMPLOYER CONFIDENTIAL CONTENT.

PANEL P1 — INTERNAL WIRING

TB-1 — DC POWER (125 VDC)

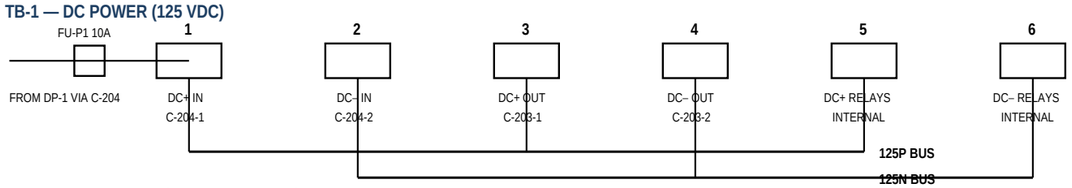

TB-2 — CT CIRCUITS (SHORTING TYPE) · TO 87T

SHORTING LINKS — SHOWN OPEN (NORMAL)

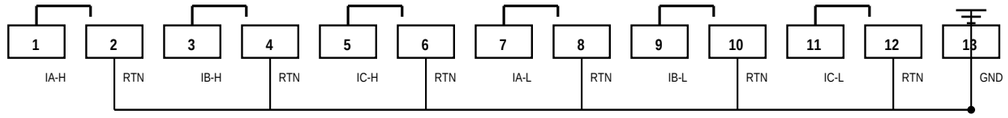

HV CIRCUIT (200:5) — TO 87T T1–T3

CT GND — ONE POINT ONLY

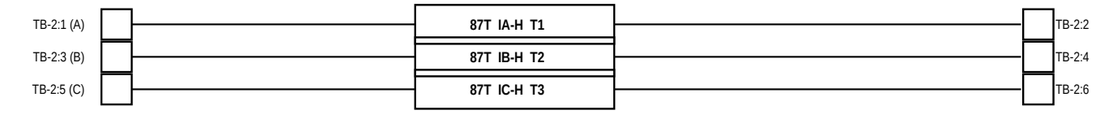

LV CIRCUIT (800:5) — TO 87T T4–T6

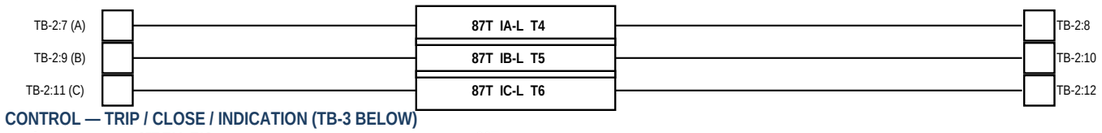

CONTROL — TRIP / CLOSE / INDICATION (TB-3 BELOW)

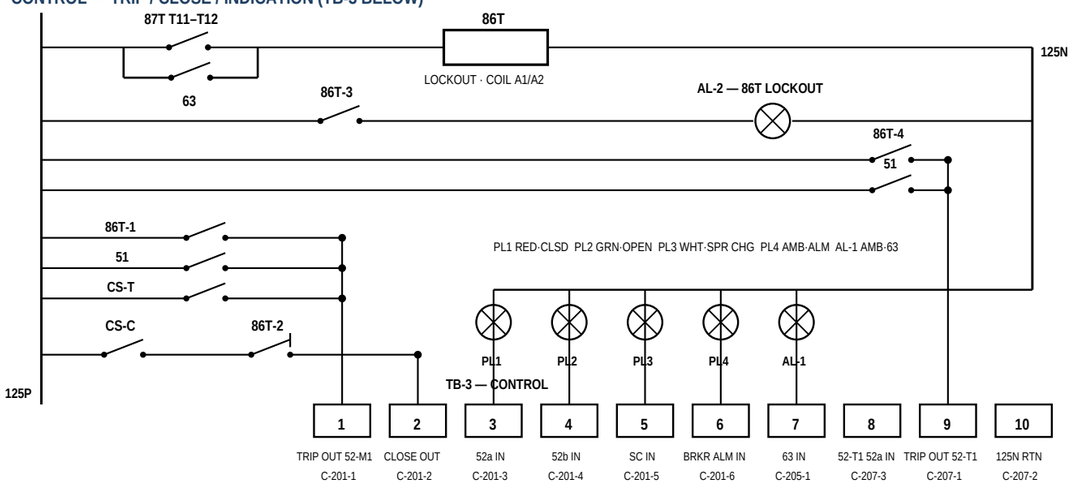

RELAY REAR TERMINALS — SCHEDULE

DEVICE	INPUTS	OUTPUTS	NOTES
87T DIFF	CT: T1–T3 HV · T4–T6 LV (TB-2)	T11/T12 → 86T COIL A1/A2	PWR: TB-1:5/6
51 O/C	CT: HV CTs CORE 2 (VIA TB-2)	TRIPS 52-M1 + 52-T1 DIRECT	PWR: TB-1:5/6
86T LOCKOUT	COIL A1/A2 FROM 87T T11/T12	86T-1..86T-4 — SEE TB-3	HAND RESET
27/59 BUS V	PT: BUS PT 7,200:120 V	27 TRIPS FDRS (TD) + ALM · 59 ALM	PWR: TB-1:5/6
F1 50/51+51N+79	CT: FEEDER F1 CTs 600:5	TRIPS 52-F1 · F2 SIMILAR	FEEDER SECTION

DATUM A DESIGN

CAD DESIGN & DRAFTING SERVICES

SAMPLE WORK

SAMPLE WORK — NOT FOR CONSTRUCTION.

Recreated sample for portfolio use only.

TITLE

CONTROL PANEL WIRING DIAGRAM

DRAWN	DATE	STANDARDS	REV
DATUM A DESIGN	2026-11-27	IEEE C37.2	A
DRAWING NO.	MATERIAL	SCALE	SHEET
DAD-SMP-008	N/A	NTS	1 OF 1

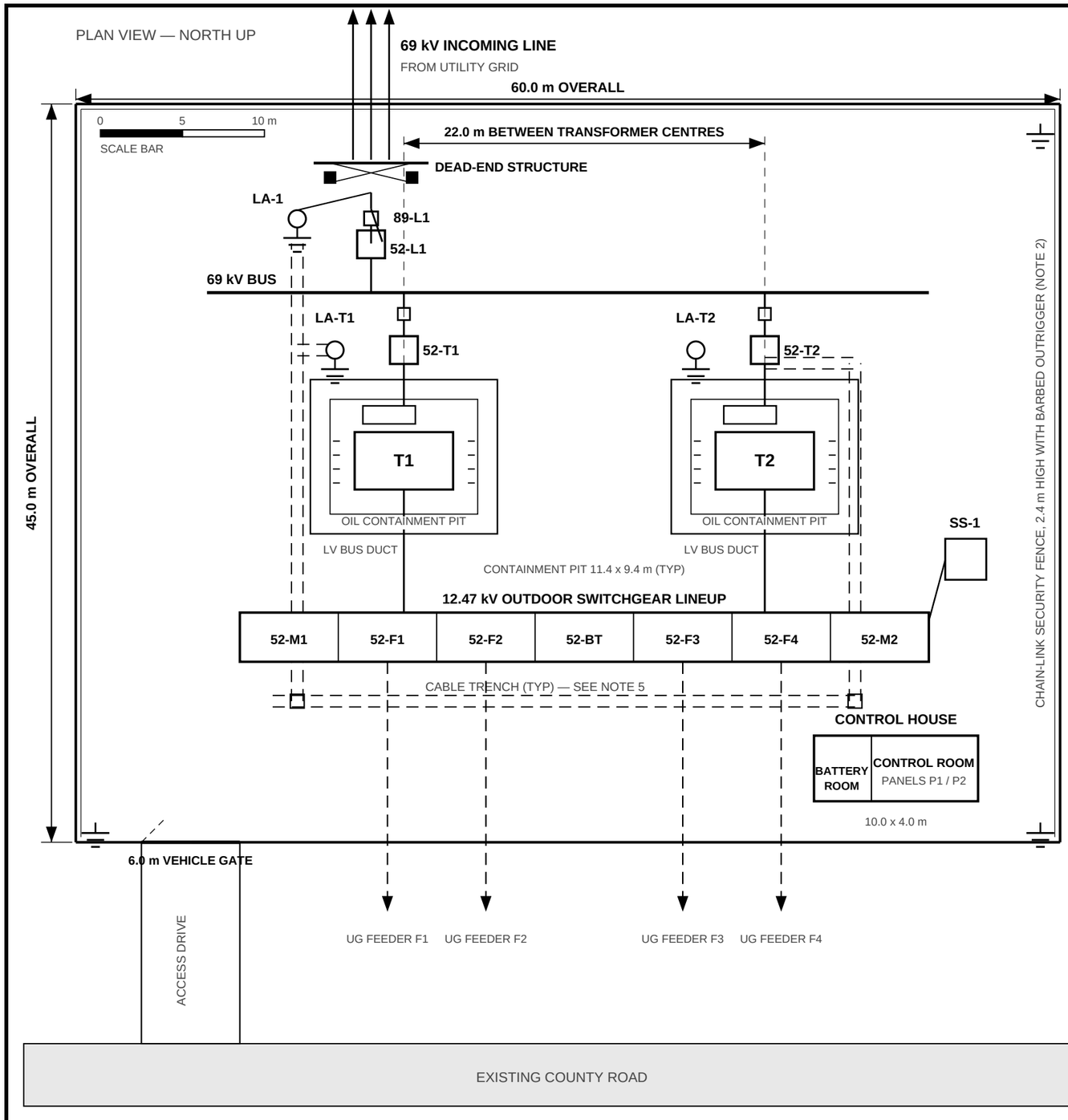

N

EQUIPMENT SCHEDULE

TAG	DESCRIPTION
52-L1	69 kV LINE BAY CIRCUIT BREAKER, 1200 A, 40 kA
89-L1	69 kV GROUP-OPERATED DISCONNECT SWITCH, 1200 A
LA-1	69 kV LINE SURGE ARRESTER SET, 54 kV DUTY / 42 kV MCOV
T1 / T2	POWER TRANSFORMER, 10/12.5 MVA, 69,000 D – 12,470Y/7,200 V
52-T1 / 52-T2	TRANSFORMER HV CIRCUIT BREAKER, 69 kV, 1200 A, 40 kA
LA-T1 / LA-T2	TRANSFORMER HV SURGE ARRESTER SET
52-M1 / 52-M2	12.47 kV MAIN BREAKER, 1200 A, 25 kA
52-BT	12.47 kV BUS TIE BREAKER, 1200 A, 25 kA
52-F1 – F4	12.47 kV FEEDER BREAKER, 600 A, 25 kA
SS-1	STATION SERVICE TRANSFORMER, 25 kVA, 12,470 – 120/240 V
CONTROL HOUSE	PROTECTION & CONTROL PANELS P1/P2, 125 V DC BATTERY ROOM

NOTES:

1. ALL DIMENSIONS ARE IN METRES. EQUIPMENT POSITIONS ARE NOMINAL; FINAL SETTING OUT PER SITE SURVEY AND EQUIPMENT FOOTPRINTS.
2. GROUND GRID PER IEEE 80: BURIED BARE COPPER GRID BELOW GRADE ACROSS THE FULL YARD. FENCE, GATE, STRUCTURES AND ALL EQUIPMENT FRAMES ARE BONDED TO THE GRID. FENCE GROUNDING CONDUCTORS RUN OUTSIDE THE FENCE LINE.
3. YARD SURFACED WITH 100 mm CRUSHED ROCK OVER GEOTEXTILE, GRADED TO DRAIN AWAY FROM EQUIPMENT PADS. ACCESS DRIVE GRAVEL SURFACED.
4. EACH TRANSFORMER SITS ON A REINFORCED CONCRETE PAD INSIDE A GRAVEL-FILLED OIL CONTAINMENT PIT SIZED FOR THE FULL OIL VOLUME PLUS RAINWATER. FIRE SEPARATION BETWEEN T1 AND T2 IS MAINTAINED CLEAR OF ALL OTHER EQUIPMENT.
5. CABLE TRENCHES ARE PRECAST CONCRETE WITH REMOVABLE COVERS; ROUTES SHOWN DASHED. TRENCHES CARRY PROTECTION, CONTROL AND STATION SERVICE CABLES BETWEEN THE YARD EQUIPMENT AND THE CONTROL HOUSE.
6. FEEDER EXITS F1 TO F4 LEAVE THE LV LINEUP AS UNDERGROUND CABLES IN DUCT BANKS AT THE POINTS SHOWN ON THE SOUTH FENCE.
7. CONTROL HOUSE HOUSES PROTECTION AND CONTROL PANELS P1 AND P2; THE 125 V DC BATTERY AND CHARGER ARE IN THE SEPARATE BATTERY ROOM AT THE WEST END.
8. DRAWN AT 1:300 ON A3. DO NOT SCALE FROM REDUCED PRINTS; USE THE SCALE BAR AND FIGURED DIMENSIONS.
9. SAMPLE WORK — RECREATED FOR PORTFOLIO USE ONLY. NO CLIENT OR EMPLOYER CONFIDENTIAL CONTENT.

DATUM A DESIGN

CAD DESIGN & DRAFTING SERVICES

SAMPLE WORK

SAMPLE WORK — NOT FOR CONSTRUCTION.

Recreated sample for portfolio use only.

TITLE

SUBSTATION GENERAL ARRANGEMENT

DRAWN	DATE	PROJECTION	REV
DATUM A DESIGN	2026-11-27	N/A	A
DRAWING NO.	**MATERIAL**	**SCALE**	**SHEET**
DAD-SMP-009	N/A	1:300	1 OF 1